24404

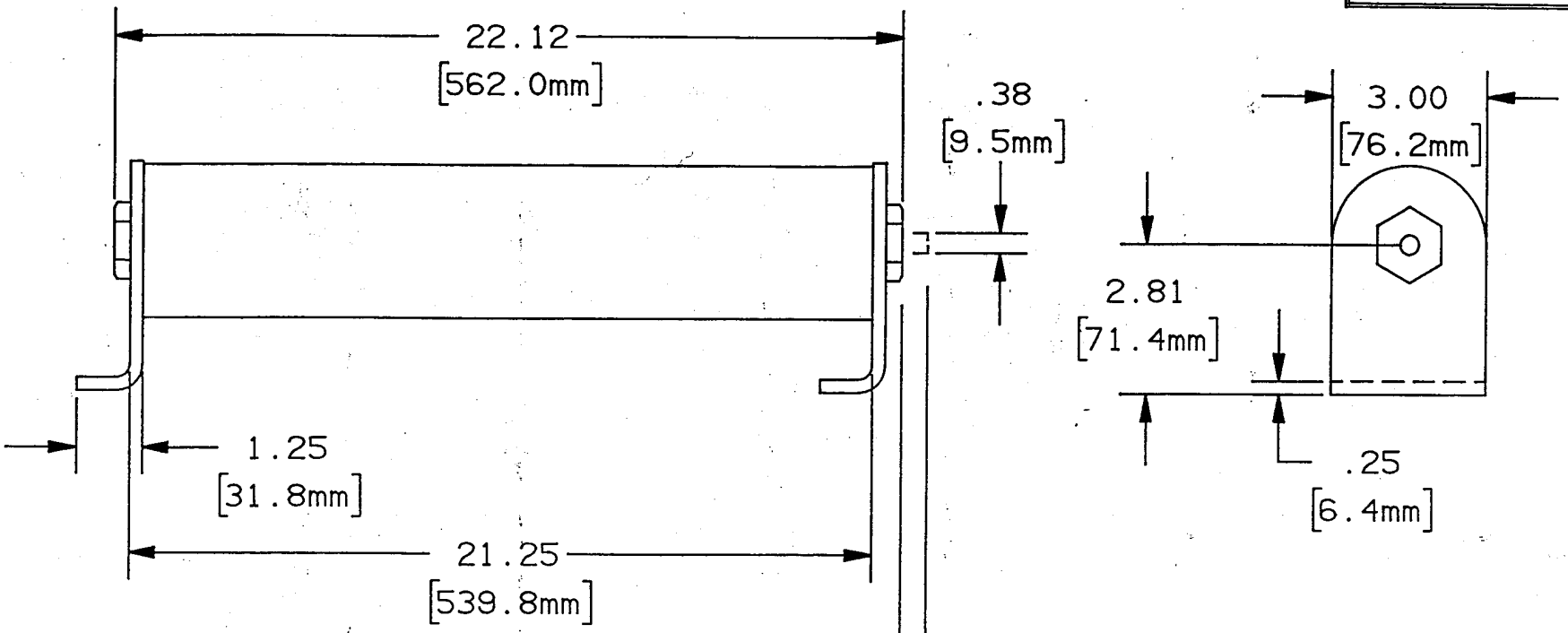

INDICATOR FLUSH WITH SURFACE "A" BEFORE FUSE OPENS.
INDICATOR EXTENDS .50(12.7mm) AFTER FUSE OPENS.
INDICATOR EXERTS 2 LBS FORCE AT END OF TRAVEL

RATING	CATALOG NO.
65E	A155C1D0R0-65E
80E	A155C1D0R0-80E
100E	A155C1D0R0-100E

GOULD 374 MERRIMAC STREET NEWBURYPORT, MA 01950

PRODUCT MANAGER
SIGN: H. C. Cline
DATE: 5/18/93

DESIGN ENGINEER
SIGN: L. O'Shields
DATE: 1/29/93

MEDIUM VOLTAGE AMP-TRAP
E-RATED GENERAL PURPOSE
CURRENT LIMITING FUSE
CL-14 SERIES, 65E TO 100E, 15.5KV MAX

OUTLINE DIMENSIONS
NOT TO BE USED FOR PRODUCTION

24404